0
S[8176].22
This program is totally useless...
as far as controlling any process. Now on the other hand if you would like to see how different instructions are converted read on.
1
Input 1 S[1].0
Input 2 S[1].1
Input 3 S[1].2
Input 4 S[1].3
Output 1 S[2].0
2
Input 5 S[1].4
Input 6 S[1].5
Input 7 S[1].6
Input 8 S[1].7
Output 2 S[2].1
3
Input 9 S[1].8
Input 10 S[1].9
Input 11 S[1].10
Input 12 S[1].11
Input 13 S[1].12
Input 14 S[1].13
Input 15 S[1].14
Input 16 S[1].15
Output 3 S[2].2
4
S[3].0
MCR
5
S[2].3
L
6
S[2].4
U
7
OSR
One Shot Rising
Storage Bit BitArray[0]
Output Bit S[20].0
SB
OB
8
MCR
9
S[3].1
BitArray[1]
S[3].2
BitArray[2]
BitArray[1]
BitArray[2]
RTO
Retentive Timer On
Timer T030
Preset 1000
Accum 0
EN
DN
BitArray[2]
T030
RES

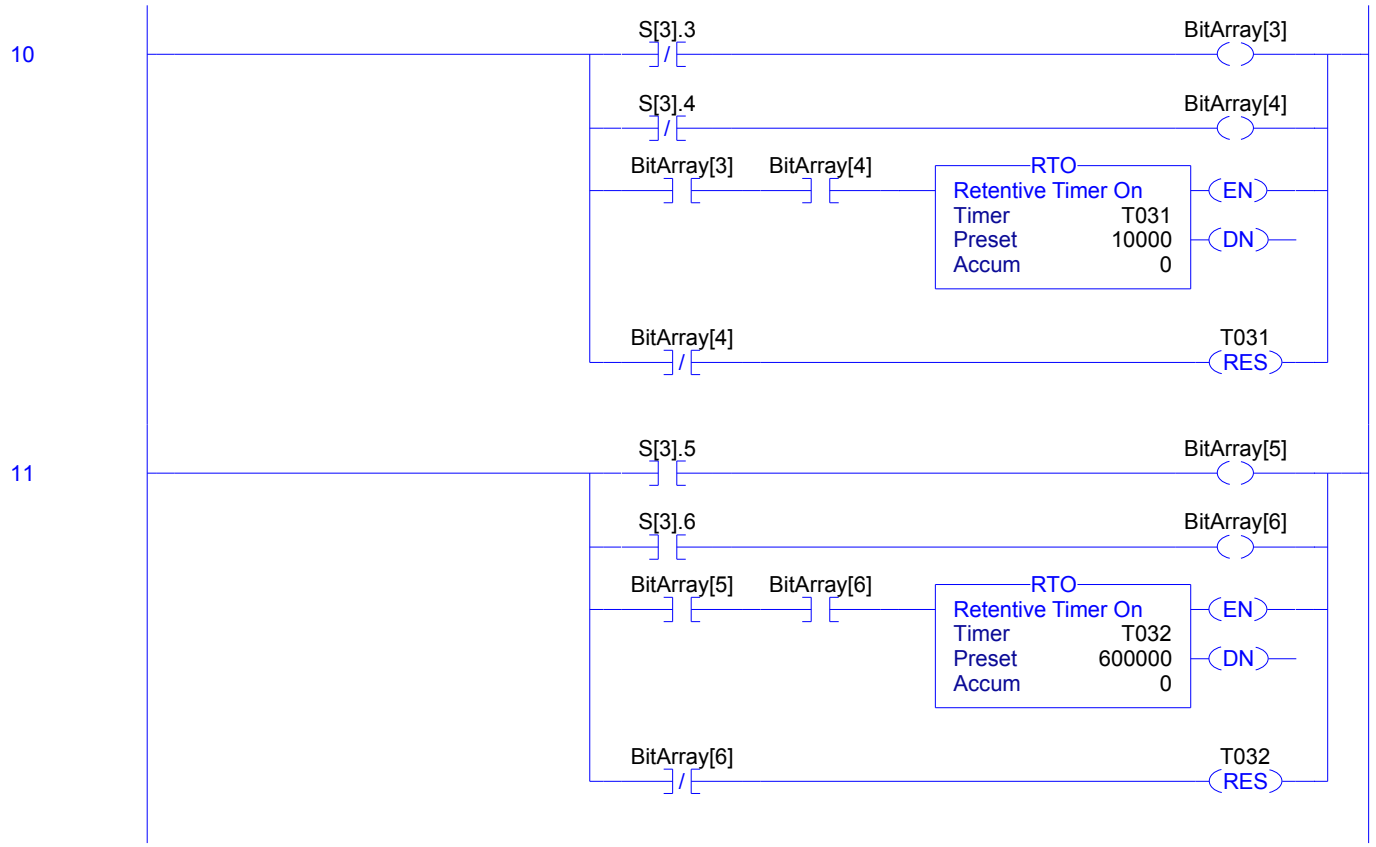
10
S[3].3
BitArray[3]
S[3].4
BitArray[4]
BitArray[3]
BitArray[4]
RTO
Retentive Timer On
Timer T031
Preset 10000
Accum 0
EN
DN
BitArray[4]
T031
RES
11
S[3].5
BitArray[5]
S[3].6
BitArray[6]
BitArray[5]
BitArray[6]
RTO
Retentive Timer On
Timer T032
Preset 600000
Accum 0
EN
DN
BitArray[6]
T032
RES

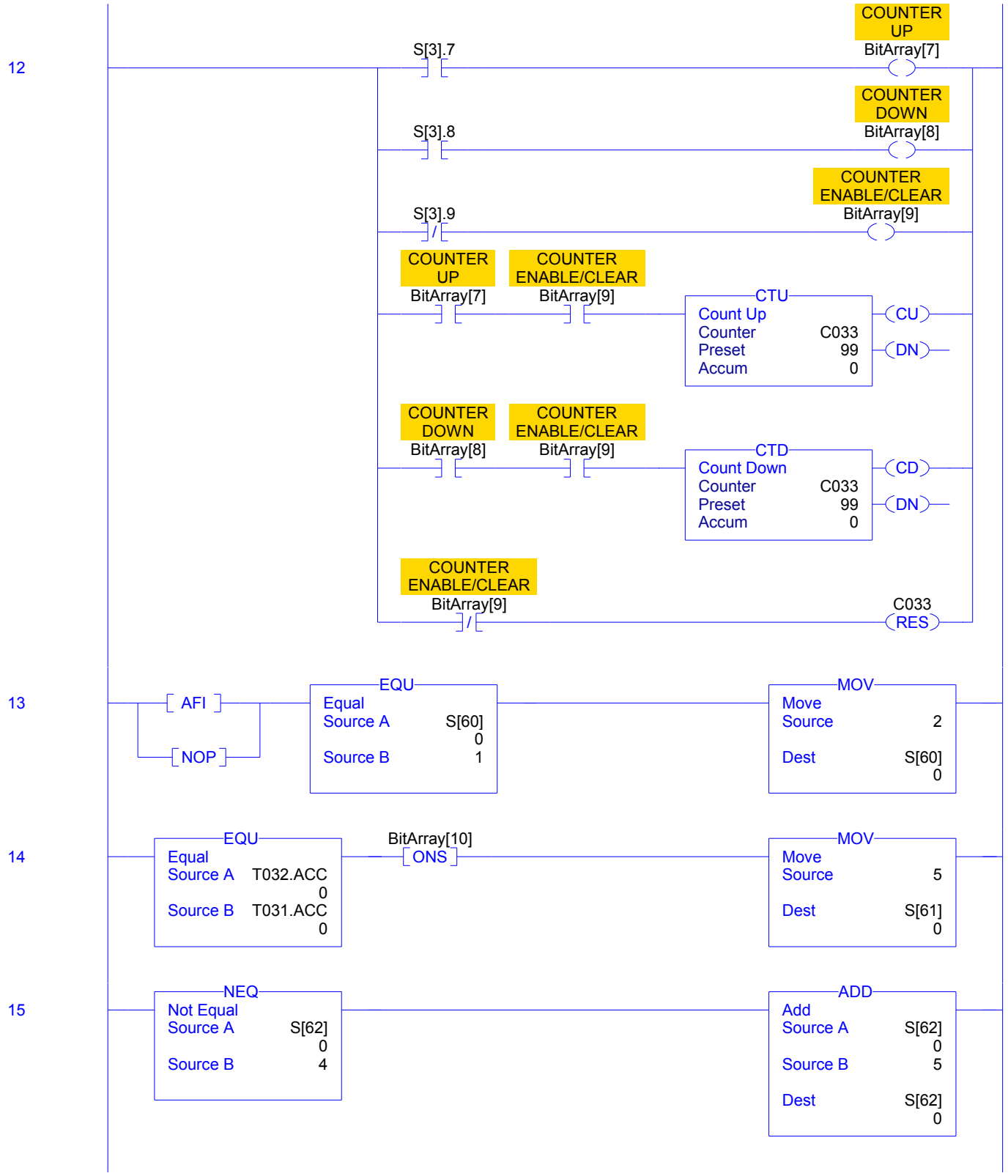
12
S[3].7
COUNTER UP
BitArray[7]
S[3].8
COUNTER DOWN
BitArray[8]
S[3].9
COUNTER ENABLE/CLEAR
BitArray[9]
COUNTER UP
BitArray[7]
COUNTER ENABLE/CLEAR
BitArray[9]
CTU
Count Up
Counter C033
Preset 99
Accum 0
CU
DN
COUNTER DOWN
BitArray[8]
COUNTER ENABLE/CLEAR
BitArray[9]
CTD
Count Down
Counter C033
Preset 99
Accum 0
CD
DN
COUNTER ENABLE/CLEAR
BitArray[9]
C033
RES
13
AFI
NOP
EQU
Equal
Source A S[60] 0
Source B 1
MOV
Move
Source 2
Dest S[60] 0
14
EQU
Equal
Source A T032.ACC 0
Source B T031.ACC 0
BitArray[10]
ONS
MOV
Move
Source 5
Dest S[61] 0
15
NEQ
Not Equal
Source A S[62] 0
Source B 4
ADD
Add
Source A S[62] 0
Source B 5
Dest S[62] 0

16
GEQ
Grtr Than or Eql (A>=B)
Source A S[63] 0
Source B 543
SUB
Subtract
Source A S[63] 0
Source B 54
Dest S[63] 0

17
LES
Less Than (A<B)
Source A S[64] 0
Source B 75
MUL
Multiply
Source A 64
Source B 10
Dest S[64] 0

18
CMP
Compare
Expression S[65] = (S[64] + 5)
MOV
Move
Source 0
Dest S[65] 0

19
CMP
Compare
Expression S[66] = (S[64] - 5)
DIV
Divide
Source A 66
Source B 2
Dest S[66] 0

20
CMP
Compare
Expression S[67] >= ((S[60] + S[61]) + S[62])
CPT
Compute
Dest S[67] 0
Expression (((S[60] * S[61]) / S[62]) + 3)

21
AFI
L_02
JMP

22
CPT
Compute
Dest S[68] 0
Expression (((S[67] AND 255) OR S[67]) XOR 8192)

23

T030.DN — BitArray[11]
S[4].1 — BitArray[12]
S[4].2 — BitArray[13]
BitArray[11] BitArray[13] — BSL
Bit Shift Left
Array S[70]
Control Ctrl000
Source Bit S[70].1
Length 144
EN
DN
BitArray[13] — Ctrl000 RES — FLL
Fill File
Source 0
Dest S[70]
Length 9

24

T031.DN — BitArray[14]
S[4].4 — BitArray[15]
S[4].5 — BitArray[16]
BitArray[14] BitArray[16] — BTD
Bit Field Distribute
Source S[81]
0
Source Bit 0
Dest S[80]
0
Dest Bit 0
Length 144
BitArray[16] — FLL
Fill File
Source 0
Dest S[80]
Length 10

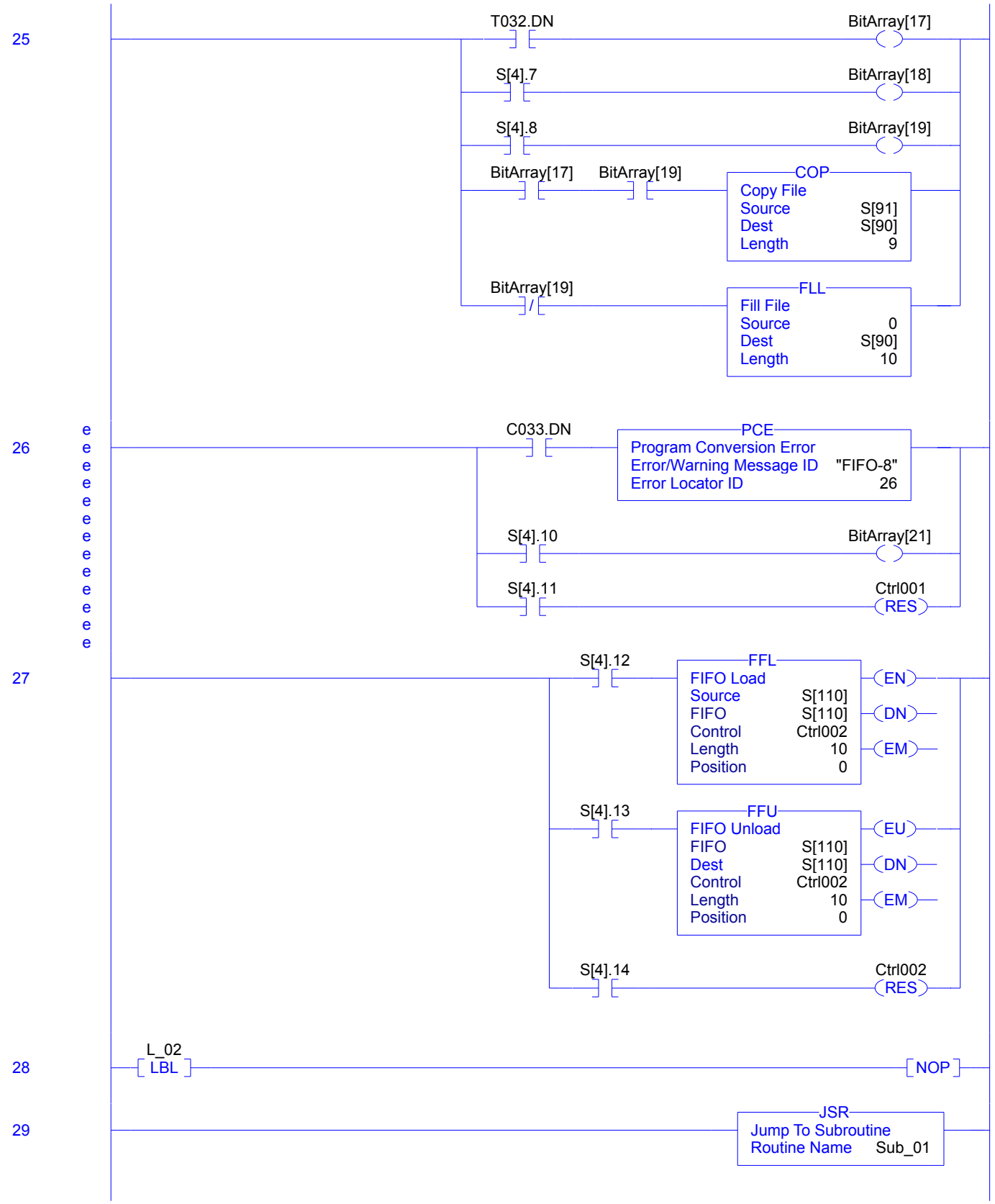
25
T032.DN
BitArray[17]
S[4].7
BitArray[18]
S[4].8
BitArray[19]
BitArray[17]
BitArray[19]
COP
Copy File
Source S[91]
Dest S[90]
Length 9
BitArray[19]
FLL
Fill File
Source 0
Dest S[90]
Length 10
26
C033.DN
PCE
Program Conversion Error
Error/Warning Message ID "FIFO-8"
Error Locator ID 26
S[4].10
BitArray[21]
S[4].11
Ctrl001
RES
27
S[4].12
FFL
FIFO Load
Source S[110]
FIFO S[110]
Control Ctrl002
Length 10
Position 0
EN
DN
EM
S[4].13
FFU
FIFO Unload
FIFO S[110]
Dest S[110]
Control Ctrl002
Length 10
Position 0
EU
DN
EM
S[4].14
Ctrl002
RES
28
L_02
LBL
NOP
29
JSR
Jump To Subroutine
Routine Name Sub_01

30

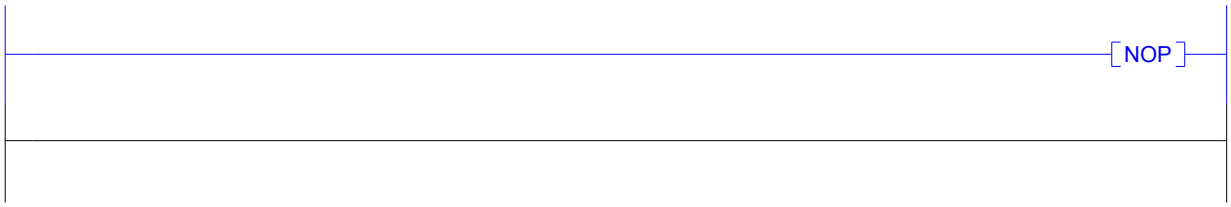

(End)

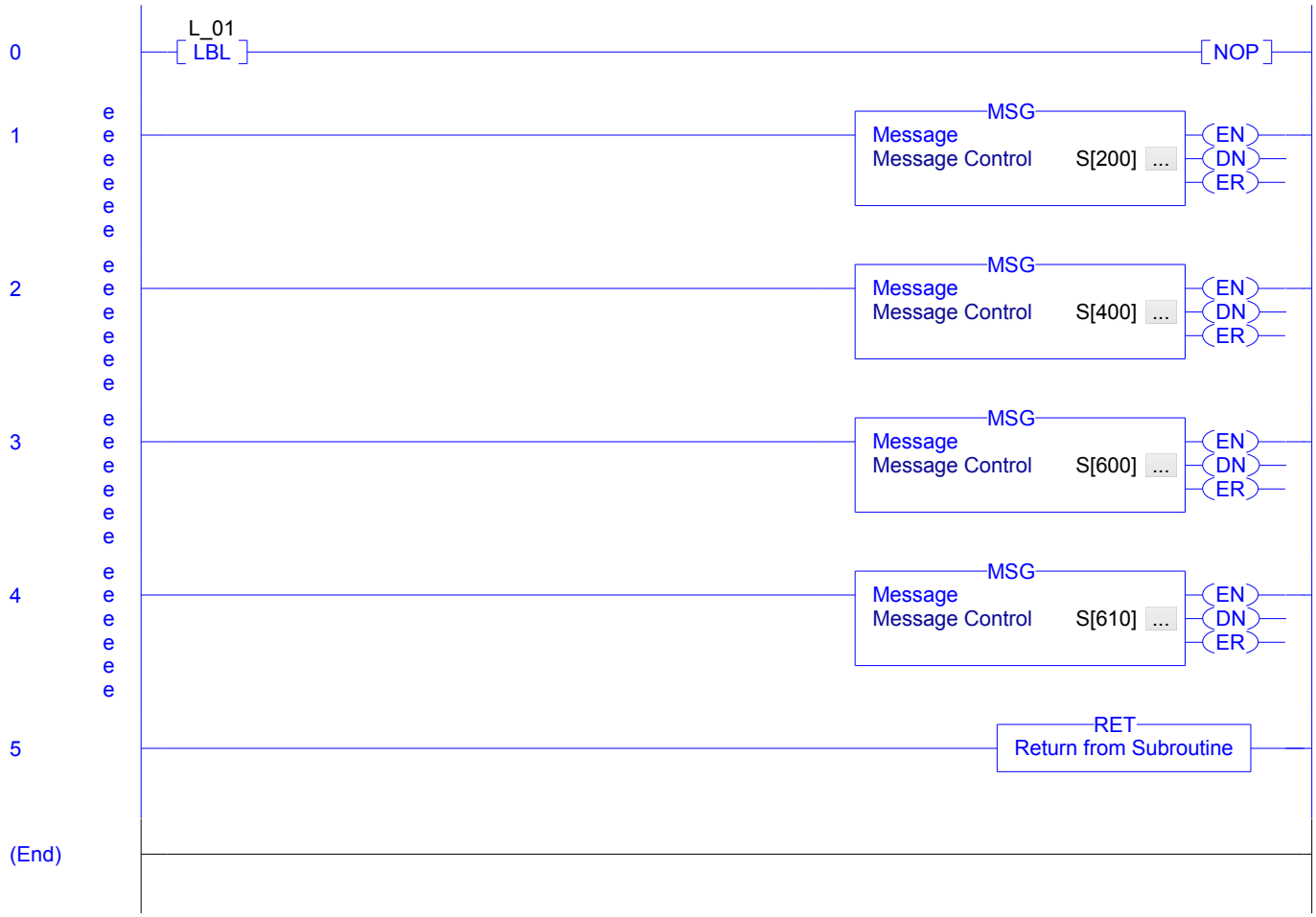
0
L_01
LBL
NOP
1
MSG
Message
Message Control S[200] ...
EN
DN
ER
2
MSG
Message
Message Control S[400] ...
EN
DN
ER
3
MSG
Message
Message Control S[600] ...
EN
DN
ER
4
MSG
Message
Message Control S[610] ...
EN
DN
ER
5
RET
Return from Subroutine
(End)